Title of Discipline:

# Computer-Aided Analysis of Electronic Circuits

# Laboratory Lecture 8

Bachelor : Telecommunication Technologies and Systems

Year of Study: 2

# Computer-Aided Analysis of Electronic Circuits

## Laboratory 8

## PSpice Transient analysis

# Standard analyses in PSpice

| PSpice command | Description |
|---|---|
| .OP (bias point) | Bias point |
| .DC ( DC analysis) | DC sweep |
| .TF (transfer) | Small-signal DC transfer function |
| .SENS (sensitivity analysis) | DC sensitivity |
| .AC ( AC analysis) | Frequency response |
| .NOISE (noise analysis) | Noise |
| .TRAN (transient analysis) | Transient |
| .FOUR (Fourier analysis) | Fourier components |

# .TRAN command

**Purpose**

The .TRAN statement causes a transient analysis to be performed on the circuit.

**General Form**

TRAN[/OP] <print step value> <final time value>

+ [no-print value [step ceiling value]] [UIC]

**Example**

TRAN 1ns 100ns

.TRAN/OP 1ns 100ns 20ns UIC

.TRAN 1ns 100ns 0ns .1ns

Prior to doing the transient analysis, PSpice computes a bias point for the circuit separate from the regular bias point. This is performed because the independent sources can have different values at the start of a transient analysis than their DC value.

# .TRAN command

The transient analysis uses an internal time step which is adjusted as the analysis proceeds. Over intervals where there is little activity, the internal time step is increased and during busy intervals it is decreased.

The default ceiling on the internal time step is *<final time value>*/50 (it is not *<print step value>*).

[/OP] Normally, only the node voltages are printed for the transient analysis bias point. However, the "/OP" suffix (on .TRAN) has the same detailed printing of the bias point that the .OP command has for the regular bias point.

*<print step value>* The time interval used for printing, plotting (.PRINT or .PLOT) the results of the transient analysis. Since the results are computed at different times than they are printed, a 2nd-order polynomial interpolation is used to obtain the printed values.

*<final time value>* The transient analysis calculates the circuit's behavior over time, starting at TIME=0 and going to the *<final time value>.*

# .TRAN command

The transient analysis always starts at TIME=0. However, it is possible to suppress output of a portion of the analysis.

*[no-print value]* The amount of time from TIME=0 which is not printed, plotted, or given to Probe.

*[step ceiling value]* Overrides the default ceiling on the internal times step with a lower value.

UIC

When the UIC is put at the end of the .TRAN statement, the calculation of the bias point is skipped. This option means that the bias conditions are fully determined by the IC= specifications for capacitors and inductors.

The .PRINT, .PLOT, .FOUR, or .PROBE statements must be used to get the results of the transient analysis.

# .FOUR command

**Purpose**

Fourier analysis decomposes the results of a transient analysis into Fourier components.

**General Form**

.FOUR <frequency value> [no. harmonics value] <output variable>

**Example**

.FOUR 10kHz V(5) V(6,7) I(VSENS3)

.FOUR 60Hz 20 V(17)

The analysis results are obtained by performing a Fourier integral on the results from a transient analysis. The analysis must be supplied with specified output variables using evenly spaced time points. The time interval used is <print step value> in the .TRAN command, or 1% of the *<final time value>* (TSTOP) if smaller, and a 2 nd -order polynomial interpolation is used to calculate the output value used in the integration.

# .FOUR command

The DC component, the fundamental, and the 2 nd through 9 th harmonics of the selected voltages and currents, are calculated by default, although more harmonics can be specified. A .FOUR command requires a .TRAN command.

Fourier analysis does not require a .PRINT, .PLOT, or .PROBE command. The tabulated results are written to the output file (".out") as the transient analysis is completed.

*<output variable>* Is an output variable of the same form as in a .PRINT command or .PLOT command for a transient analysis.

*<frequency value>* Is the fundamental frequency. Not all of the transient results are used, only the interval from the end, back to 1/*<frequency value>* before the end is used. This means that the transient analysis must be at least 1/ *<frequency value>* seconds long.

**Note** The results of the .FOUR command are only available in the output file. They cannot be viewed in Probe.

# Applications

## *Application 1*

**Activities:** 1. Describe into the SPICE circuit file (.cir) the circuit shown in following figure:

The model type for the Q1 and Q2 transistors is BC107A. The PSpice description of these transistors is as below:

Q1 2 1 4 BC107A

Q2 3 0 4 BC107A

.LIB NOM.LIB

The BC107A model is defined in the library as:

.MODEL BC107A NPN(model parameters).

The .LIB command defines the name of the library file.

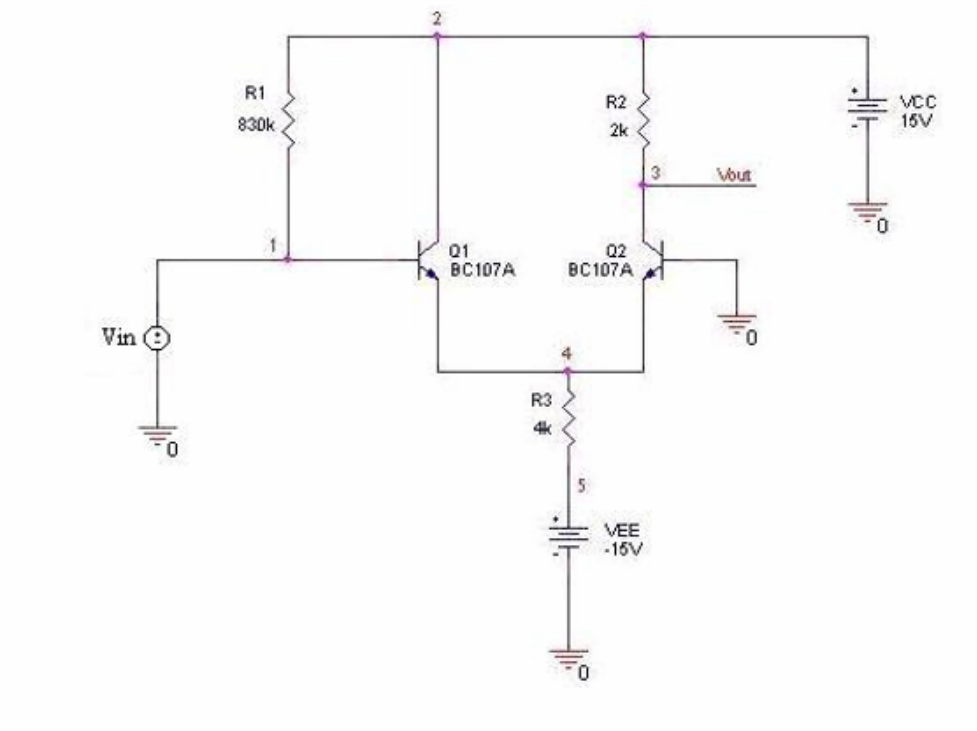

# Applications

***Application 1 (cont.)***

2. For the mentioned circuit do the following:
The Vin source will generate a sinusoidal waveform, having an offset of 0, the amplitude A (A will be defined as a global parameter, and the value 50 mV) and the frequency of 10 kHz.
3. Perform a transient analysis over a period of 5T (T = period of sinusoidal Vin source) , considering the printing step equal to T / 20 and the non-printing time equal to zero, in the following cases:
a. For the maximum calculation step (ceilling step) with default value;
b. For the maximum calculation step (ceilling step) equal to T / 50.
Plot in Probe the voltage of the output node of the circuit in both cases and observe the differences.

# Applications

## *Application 1 (cont.)*

4. Perform the analysis from 3b repeated for 3 values of amplitude of at input waveform (20mV, 50mV, 120mV). To repeatedly perform the analysis in section 3b, please use the following command:

.STEP PARAM A LIST 20m 50m 120m

Plot the voltage of the output node of the circuit and determine its amplitude.

5. For parametric analysis at point 4, perform a Fourier analysis to determine the harmonic distortion coefficients of the circuit, if the output variable is the voltage output, for the three values of the input voltage amplitude.

For points 4 and 5 a table as below shall be completed. Compare the values in column 3 to the bandwidth values of the circuit, determined at .AC analysis.

| Input amplitude value | Output amplitude value | Output amplitude/Input amplitude value | harmonic distortion coefficient |
|---|---|---|---|
| 20mV | | | |
| 50mV | | | |
| 120mV | | | |